COMMERCIAL:

FEATURES:
- Available in 2 Step through 4 Step
- Available in 24", 30" and 36" Span
- .065" Wall Stainless Steel Construction
- 304 SS
- 1.90" OD

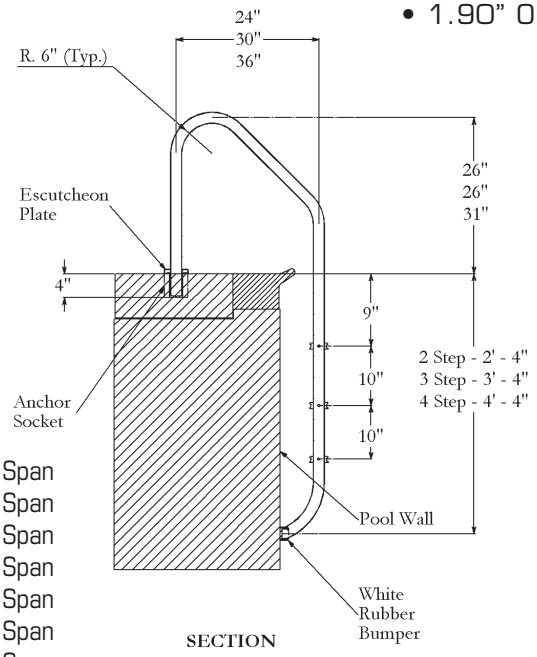

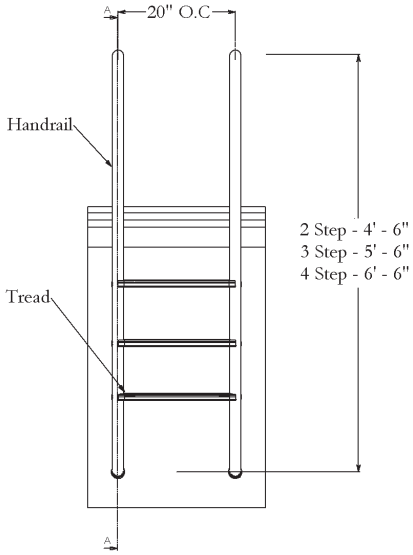

Commercial Ladder
Part # COML336065S Shown
Available in 2 Step through 4 Step and in 24", 30" & 36" Span
Part # COML224065 - 2 Step w/24" Span
Part # COML324065 - 3 Step w/24" Span
Part # COML424065 - 4 Step w/24" Span
Part # COML230065 - 2 Step w/30" Span
Part # COML330065 - 3 Step w/30" Span
Part # COML430065 - 4 Step w/30" Span
Part # COML236065 - 2 Step w/36" Span
Part # COML336065 - 3 Step w/36" Span
Part # COML436065 - 4 Step w/36" Span

NOTE: Escutcheons sold separately w/ss products; included with powder coated ladders and rails. All measurements on center.

COMMERCIAL – CROSS BRACED:

FEATURES:
- Available in 2 Step through 4 Step
- Available in 24", 30" and 36" Span
- .065" Wall Stainless Steel Construction
- Superior Quality Cross Brace Welds
- 304 SS
- 1.90" OD

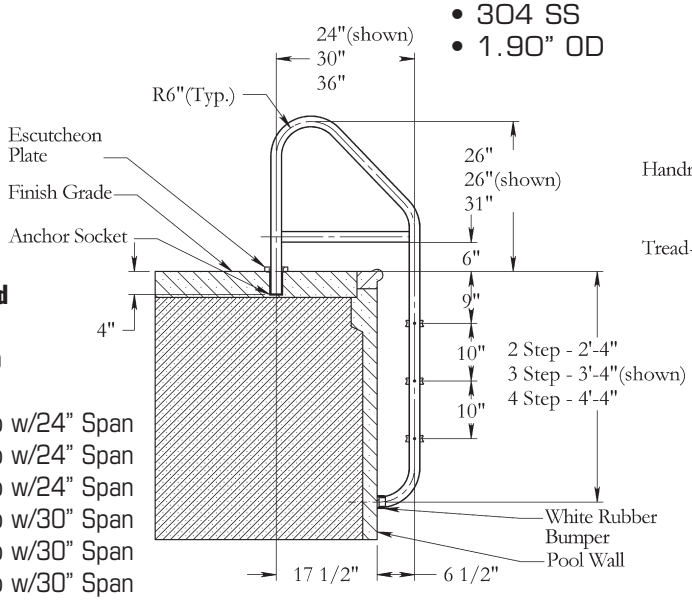

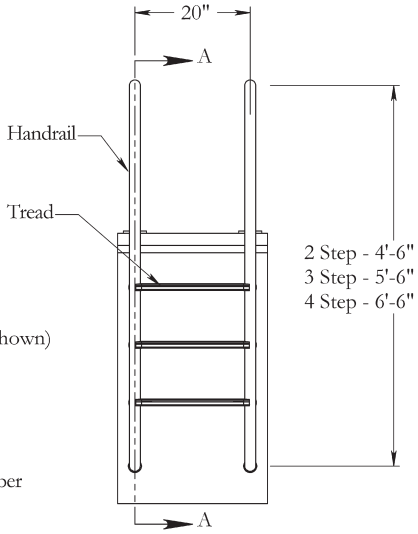

Commercial Ladder - Cross Braced
Part # COML3CB24065S Shown
Available in 2 Step through 4 Step and in 24", 30" & 36" Span
Part # COML2CB24065 - 2 Step w/24" Span
Part # COML3CB24065 - 3 Step w/24" Span
Part # COML4CB24065 - 4 Step w/24" Span
Part # COML2CB30065 - 2 Step w/30" Span
Part # COML3CB30065 - 3 Step w/30" Span
Part # COML4CB30065 - 4 Step w/30" Span
Part # COML2CB36065 - 2 Step w/36" Span
Part # COML3CB36065 - 3 Step w/36" Span
Part # COML4CB36065 - 4 Step w/36" Span

NOTE: Escutcheons sold separately w/ss products; included with powder coated ladders and rails. All measurements on center.