2014 BYOS 1 QUOTE REQUEST FORM

Distributor Name _____ Phone _____

Address _____ Fax _____

Contact Name _____

Dealer/Builder Name _____ Phone _____

Address _____ Fax _____

Contact Name _____

Job Reference _____ Est. Build Date _____

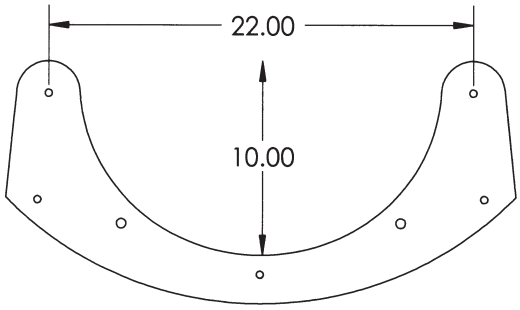

BYOS 1 Flume Dimensions

BYOS 1™ DESIGN CONSIDERATIONS

- In your design, provision must be made for future removal of the slide from the substrate if necessary. Flange/gasket connections must be accessible for inspection and maintenance, including but not limited to retightening of fasteners as the slide can move slightly both vertically and horizontally based on the slider's weight and velocity.
- Do not construct objects or formations along or over the slide pathway that obstruct the pathway for sliders or cause potential harm to the head, arms or legs. Minimum recommended head clearance above the slide pathway is 7 feet.
- Minimum BYOS 1 water envelope is 6.5' wide (centered on slide) x 13.5' long x 4' deep.
- All BYOS 1 products are for residential in ground pool installation and use only. Inter-Fab expressly disclaims any and all warranties and liability arising from the installation or use of its BYOS 1 products in a commercial, non-pool or above ground pool application or setting.
- Inter-Fab will provide you with a slide system which matches the pathway and spatial requirements you request as closely as possible. It is important to note however, that Inter-Fab does not approve or accept liability for BYOS 1 designs. All designs should be checked by a licensed Civil or Structural Engineer in your state, and when necessary inspected/approved by the applicable local governing agency.

Did you know that you can get a custom colored T7 Diving System to match your custom BYOS?

inter-fab.com

INTER-FAB INC. • 3050 S. Alvernon Way • Tucson, AZ 85713 • 800-737-5386

Rev. 4/14

2014 BYOS 1 QUOTE REQUEST - CONT.

STEP ONE

1. What is entry height above deck? _____
2. What is exit height above deck? _____
2. What is the estimated length of runway? _____

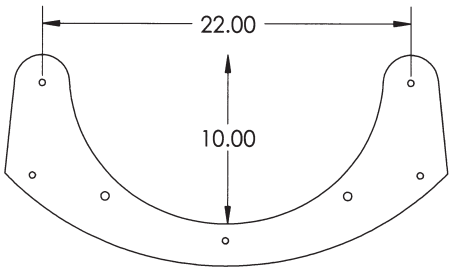

BYOS 1 Flume Dimensions

STEP TWO

1. Provide us with a drawing of your slide.
   (Anything from a napkin drawing to an actual CAD drawing will suffice.)
   Please Note: *Height, slope and actual length of slide will be adjusted as close to your design as possible. Actual designs may vary.*

2. Choose Slide Color: *(pick one)*
   Standard Colors: ❑ Tan (-51); ❑ Gray (-52); ❑ Summit Gray (-53)
   Upgrade Colors: ❑ Mont Blanc (-54); ❑ Pebble (-55); ❑ Fashion Gray (-56); ❑ Cappuccino (-57)
   ❑ Autumn Sun (-58); ❑ Safari Sunrise (-59)

STEP THREE

1. Decide if you would like assist rails and provide appropriate lengths, if applicable.
2. Seating Assist Rails: ❑ Surface Mount 3.5" Flange; ❑ Sub-Surface Mount
3. Climbing Assist Rails: ❑ Surface Mount 3.5" Flange; ❑ Sub-Surface Mount
   Length: ❑ 24"; ❑ 36"; ❑ 48"; ❑ Custom Length _____
4. Choose Assist Rail Color: *(pick one)*
   Standard Colors: ❑ Stainless Steel
   Upgrade Colors: ❑ White (-1); ❑ Earth (-3); ❑ Light Gray (-9); ❑ Hammertone Gray (-6);
   ❑ Copper Vein (-4)

STEP FOUR

FAX this form to Marjie Beahan at: 520-790-7127 ,or
EMAIL this form to Marjie.BYOS@inter-fab.com

BYOS 1™ LIABILITY DISCLAIMER

DISCLAIMER OF LIABILITY: This Price Quote and the design for BYOS 1 products shown herein are based solely on the specifications provided to Inter-Fab, Inc. ("Inter-Fab") by the Builder/Distributor. Inter-Fab expressly disclaims any liability for the specifications or design, the suitability of BYOS 1 products specified herein to the installation location, the installation or alteration of BYOS 1 products. By accepting this Price Quote, the Builder/Distributor assumes all responsibility for the specifications and design, for the proper installation of BYOS 1 products and for any alteration of BYOS 1 products and agrees to hold Inter-Fab harmless for any claims, damages or liability (including attorneys fees and costs) arising from such specifications, design, installation not in compliance with Inter-Fab's installation instructions, or alteration of BYOS 1 products. By accepting this Price Quote, the Builder/Distributor agrees to deliver, and assumes responsibility for delivering, a copy of this Disclaimer of Liability, Proper Use Instructions, and Installation Warnings to the retail consumer.

Did you know that you can get a custom colored Pool/Spa Table to match your custom BYOS?

inter-fab.com