RESIDENTIAL SLIDES – GEL COAT: BYOS™ (BUILD YOUR OWN SLIDE)

The BYOS slides are CUSTOM slides and cannot be ordered without going through the quote and design process at Inter-Fab. 800-737-5386

The Build Your Own Slide™ (BYOS™) products provide easy slide solutions to builders incorporating handcrafted rock work or concrete formations into custom backyard settings.

Salt Pool SAFE™ read more at inter-fab.com/salt

BYOS PRODUCTS STANDARD COLORS:

Tan: -51; Gray: -52; and Summit Gray: -53

BYOS PRODUCTS CUSTOM COLORS:

Mont Blanc: -54; Pebble: -55; Fashion Gray: -56; Cappuccino: -57; Autumn Sun: -58; Safari Sunrise -59

(add custom color code behind part #)

FEATURES:

- Three Collections (BYOS 1, BYOS 2, & Garden Ride Series) of Custom Flume Sections That Can Be Used in Various Combinations *(BYOS 1, BYOS 2, & Garden Ride Series Parts Are Not Interchangeable)*
- Zoom Flume™ Water Delivery System
- Construction Anchoring System Included
- Stainless Steel Hardware Included
- Optional Handrails Available *(Included with Garden Ride Series)*
- Earth Tones & Gray Colors Available
- Advanced High-Tech RTM Manufacturing
- BYOS 1 Weight Limit = 250 lbs.
- BYOS 2 Weight Limit = 350 lbs.
- Garden Ride Weight Limit = 350 lbs.
- Multiple Patents Pending
- *Matching Products:* T7 Diving System, Pool/Spa Table & Pool Lifestyle Tables

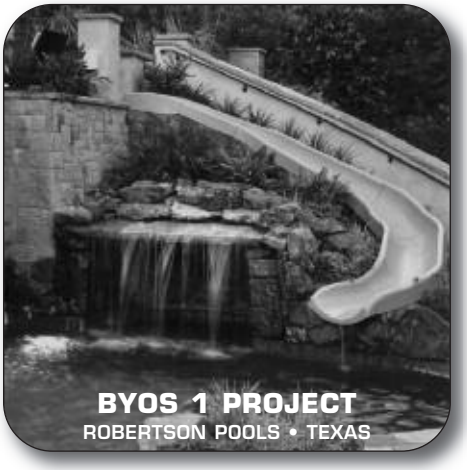

BYOS 1 PROJECT
ROBERTSON POOLS • TEXAS

BYOS 2 PROJECT
PENGUIN POOLS • MINNESOTA

GARDEN RIDE SERIES
15' GARDEN RIDE SHOWN

BYOS 1 & 2 SLIDES: Customizable by length and shape. *(Must pass Inter-Fab safety requirements.)*
GARDEN RIDE SLIDES: Pre-set slide configurations available in 7', 10' and 15' lengths.

MATCHING PRODUCTS AVAILABLE:

The T7 Diving System™, Pool/Spa Table™, Pool Lifestyle Umbrella Table and Pool Lifestyle Beverage Table are designed to match the BYOS slide products perfectly for a complete designer pool look.

Add on matching products to your pool design to create a custom, color coordinated theme specific to the homeowner's style and décor.

T7 Diving System™

Pool/Spa Table™

Pool Lifestyle Beverage Table

BYOS 1™ & BYOS 2™ SLIDES:

The BYOS 1 & 2 slides are CUSTOM slides and <u>must</u> be ordered by following the quote and design process at Inter-Fab. Phone: 800-737-5386

BYOS PRODUCTS STANDARD COLORS:

Tan: -51; Gray: -52; and Summit Gray: -53

BYOS PRODUCTS CUSTOM COLORS:

Mont Blanc: -54; Pebble: -55; Fashion Gray: -56; Cappuccino: -57; Autumn Sun: -58; Safari Sunrise -59

(add custom color code behind part #)

BYOS 1 slides are designed for use in residential pool applications.

BYOS 2 slides are designed for use in both residential and commercial pool applications.

Matching Products: T7 Diving System, Pool/Spa Table, & Pool Lifestyle Tables

BYOS FEATURES:

- Collections of Different Flume Sections that can be Used in Various Combinations
- Exclusive Zoom Flume™ Water Delivery System *(TWO on BYOS 2 slide)*
- Construction Anchoring System Included
- Stainless Steel Hardware Included
- Optional Handrails Available
- Variety of Earth Tones & Gray Colors Available
- Advanced High-Tech RTM Manufacturing
- BYOS 1 Weight Limit = 250 lbs
- BYOS 2 Weight Limit = 350 lbs.
- BYOS 1 = 20-40 GPM (Actual GPM rating will vary depending on specific pool size and pool equipment used.)
- BYOS 2 = 40-80 GPM (Actual GPM rating will vary depending on specific pool size and pool equipment used.)
- Multiple Patents Pending

RESIDENTIAL SLIDES

BYOS 1 SLIDE:

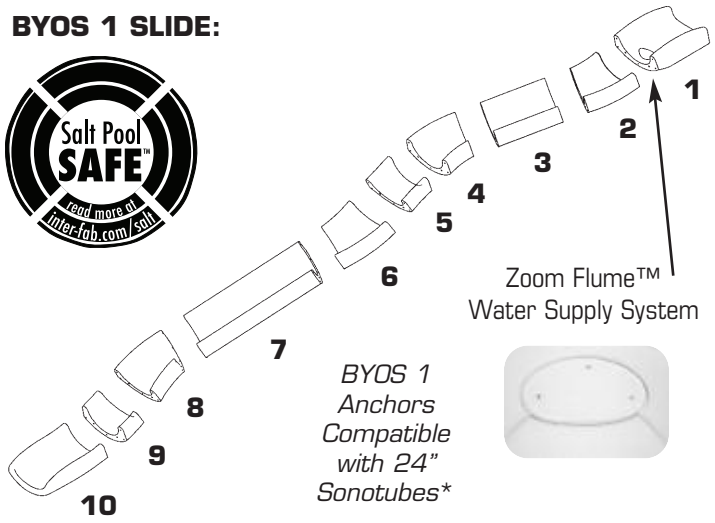

*BYOS 1 Anchors Compatible with 24" Sonotubes**

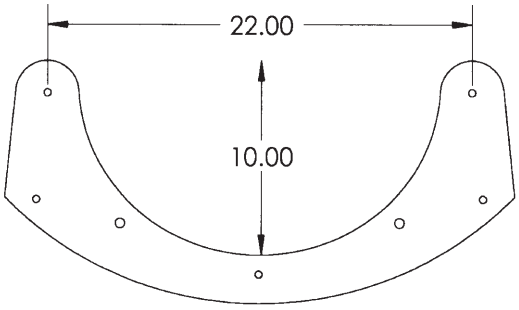

BYOS 1 Flume Dimensions

BYOS 2 SLIDE:

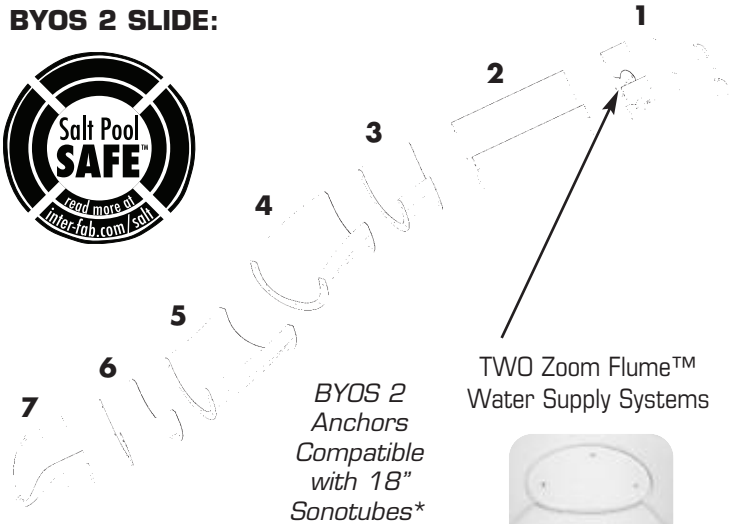

*BYOS 2 Anchors Compatible with 18" Sonotubes**

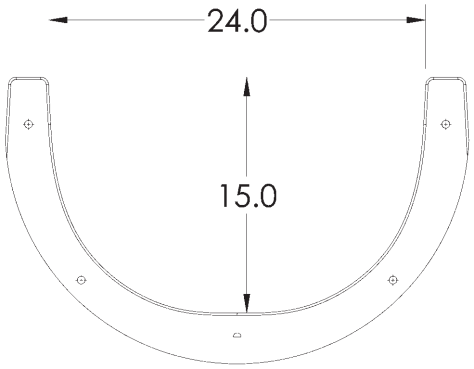

BYOS 2 Flume Dimensions

* *Refer to the BYOS 1 & 2 installation manual for details.*