POOL/SPA TABLE & SEAT
Assembly & Installation Instructions

table shown in pool setting with umbrella (not included)

table shown in spa setting

table shown in pool setting with pool seats

WARNING: IMPORTANT INSTALLATION INFORMATION

The installation of this product should be done only by a licensed and professional installer. Installation should be done strictly in conformance with all local building codes, electrical codes and other building and safety laws and regulations. Among other things, that your installer should carefully analyze the need to bond the product to prevent an electrical hazard. Failure to properly install this product could result in a dangerous condition, including but not limited to electrical or structural hazards. Inter-Fab, Inc. disclaims all liability arising from the installation and the user assumes all risk associated with the installation.

INTER-FAB, INC. 3050 S. ALVERNON WAY • TUCSON, AZ 85713
520.790.7040 • 800.737.5386 • FAX 520.790.7127 • inter-fab.com

Table/Seat-IM Rev. 8/15 (WS-BK PS TABLE)

INTENDED USE INSTRUCTIONS

1. Everyone who uses this Pool/Spa Table or Seat must understand and follow these instructions.
2. If installed in a pool with diving equipment or a pool slide, the table or seat installation must not interfere with the diving or sliding safety envelope.
3. Be familiar with the shape and depth of the pool or spa before you install the table or seat. This table or seat should only be used in the shallow end of the pool or spa.
4. To avoid entrapment, do not swim under or near table or seat.
5. Do not climb on or hang from any part of the table, support poles, umbrella, or seat.
6. Do not stand, jump or dive from any part of the table or seat.
7. No roughhousing or horseplay should be allowed around the table or seat at any time.
8. CAUTION: Table top and seat are slippery when wet.
9. Do not drink alcohol in pool or spa.
10. Do not take chances and inspect the table and seat **at least** once a year for parts that may become loose, damaged, weakened or broken. If necessary, before using the table or seat again, have it inspected and repaired by a competent professional familiar with pool/spa tables and seats.
11. When removing the table or seat support post, be sure to put the anchor cap in place over the anchor. This will prevent any possible injury and debris from falling into the anchor.

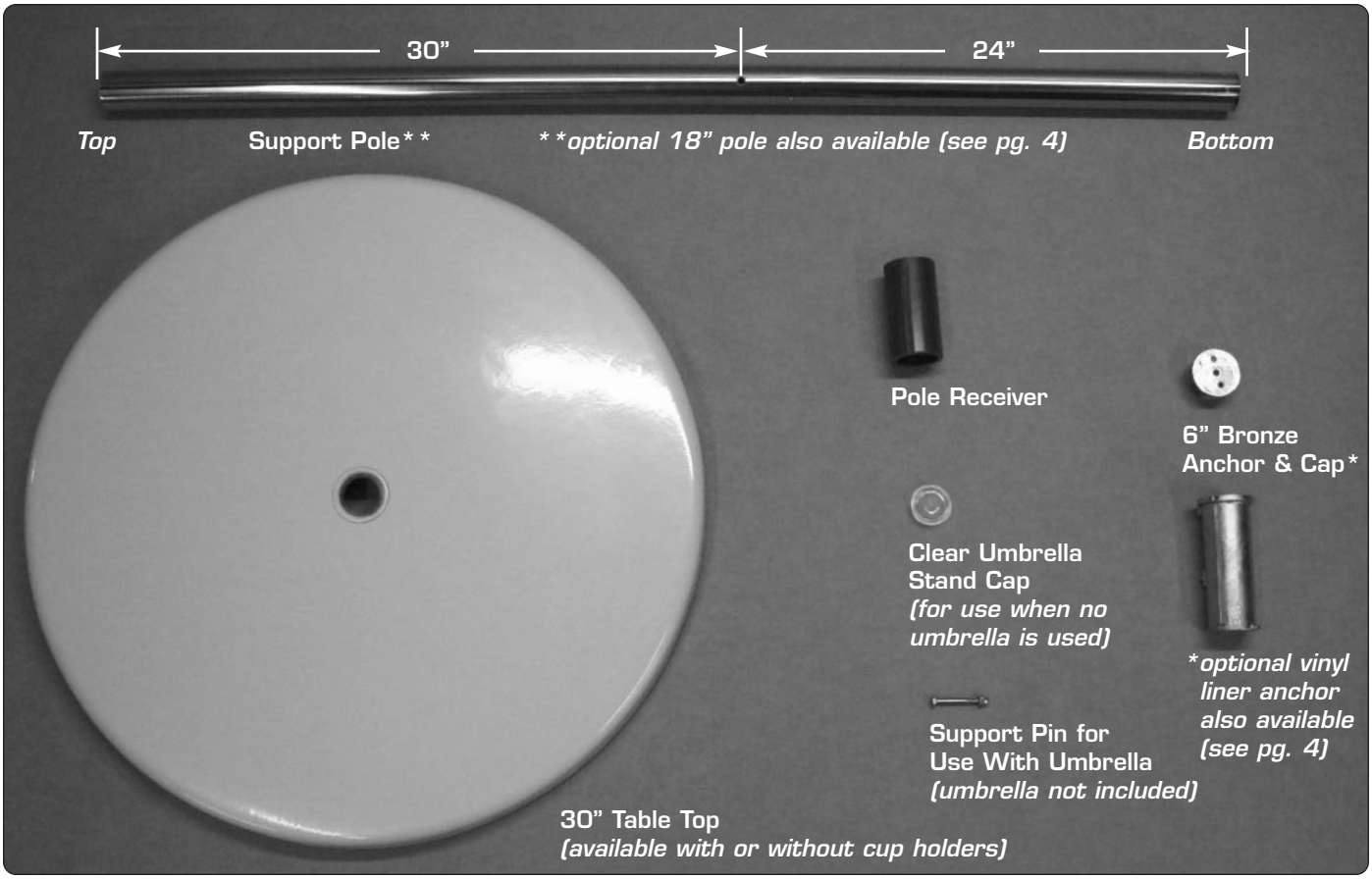

Figure 1: *Pool/Spa Table Parts: Support Pole, 6” Bronze Anchor, 30” Table Top, Pole Receiver, Clear Umbrella Stand Cap, & Umbrella Support Pin (NOT SHOWN: optional 18” support pole; optional vinyl liner pool anchor)*

ASSEMBLY AND INSTALLATION INSTRUCTIONS FOR POOL/SPA TABLE:

1. Identify all Pool/Spa Table components. ***See Figure 1.*** *(Please see page 3 for Pool/Spa Seat installation.)*
2. Locate a proper installation location within the pool or spa.
3. Install the 6” bronze anchor socket or vinyl liner pool anchor (if supplied) in the pool or spa floor. Make sure the anchor is plumb. Properly bond the anchors in accordance with local codes.
4. Table support pole comes 54” in length. This allows for a maximum table height of 48” from the bottom floor of a pool or spa. (6” of the post sits in the bronze anchor socket) Tanning ledge support post in 18” also available (12” table height).

5. The support pole has a pass through hole 30" from the top of the pole, or 24" from the bottom of the pole. This allows a stop point when using an umbrella. The 30" end points upward during assembly. If cutting pole, cut from the end that is 24" from the pass through hole. (No pass through hole for 18" support pole.)
6. If a shorter table height is desired, determine height required and add 6" for the bronze anchor socket. Cut the support pole with a hacksaw. (Example: a 30" table height would require a 36" support pole)
7. Deburr and clean the cut end of support pole (if cutting).
8. Remove the bronze anchor cover plate and place the cut end of the support pole fully into the anchor socket.
9. Locate the support pole receiver. **NOTE: white internal ring end gets glued into table flange. *See Figure 2.***
10. Place the support pole receiver on top of the support pole. **NOTE: the support pole will help facilitate the gluing of the support pole receiver into the table flange. *See Figure 3.***
11. Lay the table upside down on the cardboard box to prevent scratching. Use PVC glue to permanently attach the support pole receiver to the table flange. Support pole should still be inside receiver. Use the support pole to fully seat the receiver into the flange. ***See Figure 4 and Figure 5.***
12. When the receiver is fully inside the flange, the support pole can then be removed. ***See Figure 6.***
13. An umbrella *(not included)* may be used by removing the clear cap from the table grommet. (Maximum umbrella pole size is 1-5/8" or 1.625").
14. When removing the table be sure to insert the bronze anchor cover plate.

Figure 2: *Pole Receiver*

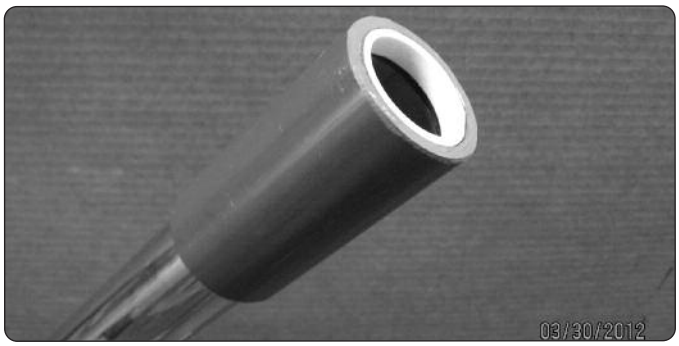

Figure 3: *Pole Receiver on Support Pole*

Figure 4: *Pole Receiver Shown with Table Flange*

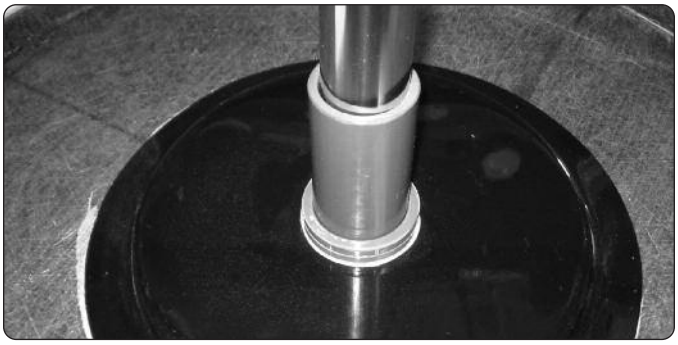

Figure 5: *Pole Receiver Attached to Table Flange*

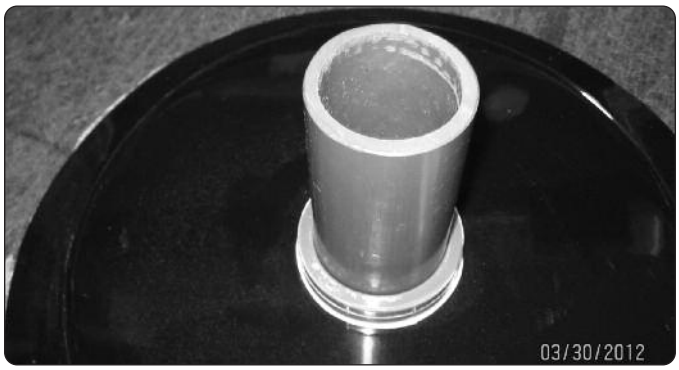

Figure 6: *Properly Glued Pole Receiver Shown*

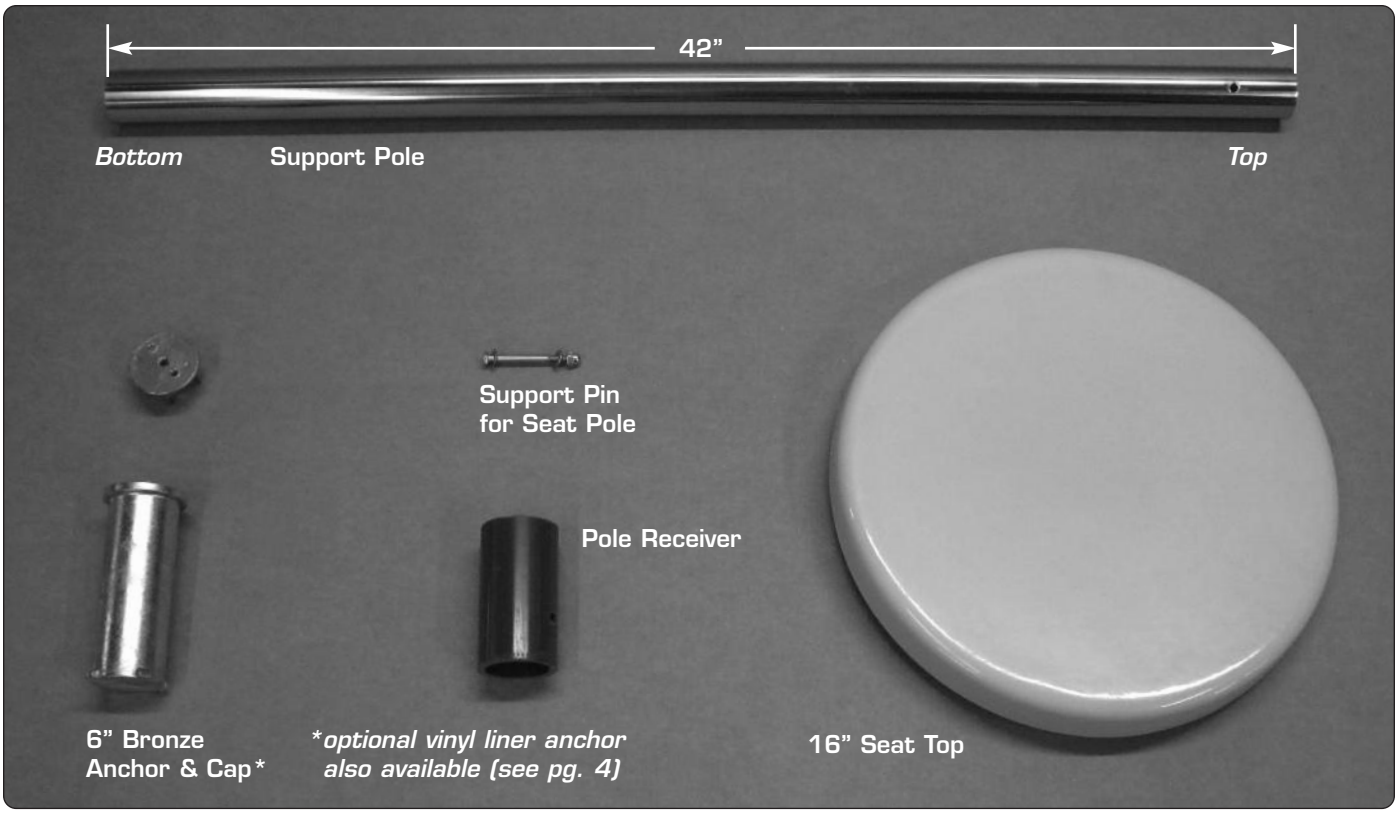

Figure 7: *Pool/Spa Seat Parts: Support Pole, 6” Bronze Anchor, 16” Seat Top, Pole Receiver, and Seat Pole Support Pin (NOT SHOWN: optional vinyl liner pool anchor)*

ASSEMBLY AND INSTALLATION INSTRUCTIONS FOR POOL/SPA SEAT:

1. Identify all Pool/Spa Seat components. ***See Figure 7.*** *(Please see page 1 for Pool/Spa Table installation.)*
2. Locate a proper installation location within the pool or spa. **NOTE: When installing with a Pool/Spa Table, *See Figure 8* for suggested placement.**

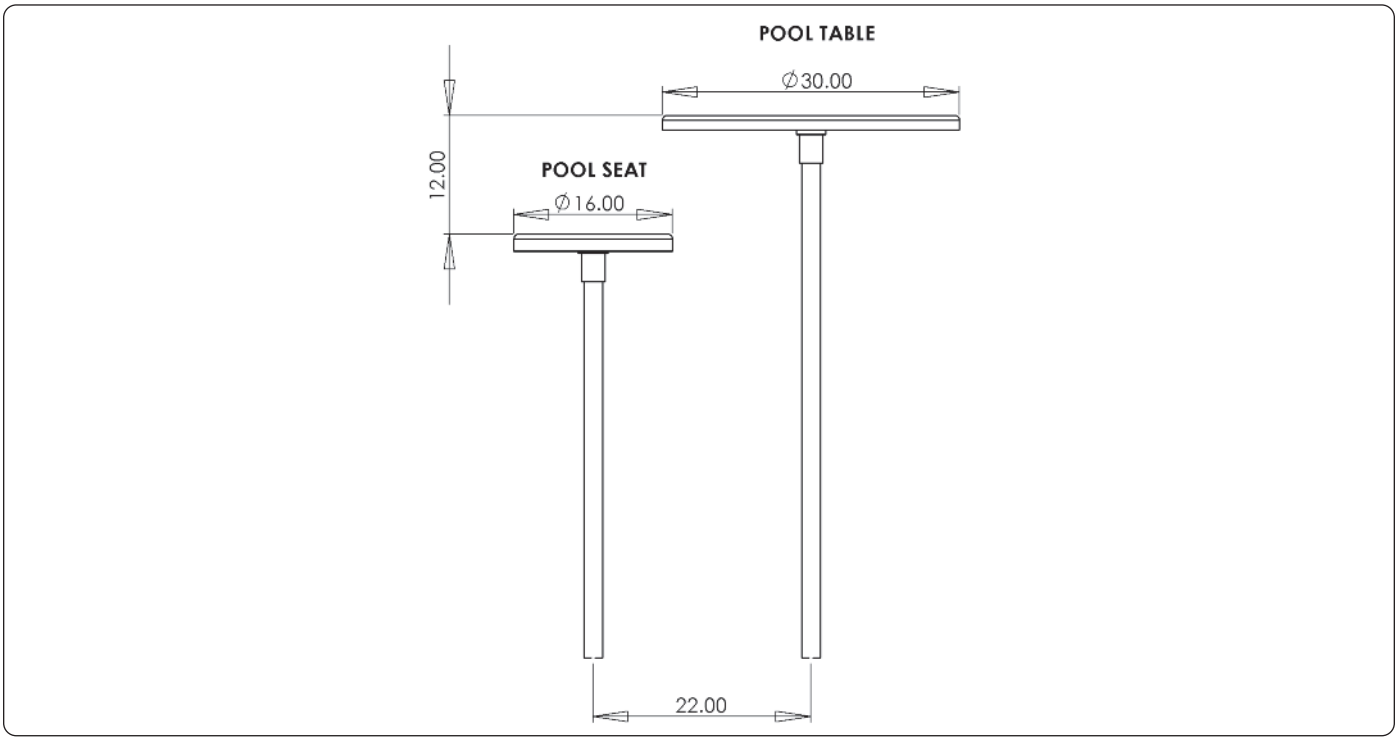

Figure 8: *Pool/Spa Table & Seat Recommended Placement Diagram*

ASSEMBLY AND INSTALLATION INSTRUCTIONS FOR POOL/SPA SEAT: *Continued*

3. Install the 6" bronze anchor socket in the pool or spa floor. Make sure the anchor is plumb. Properly bond the anchor in accordance with local codes.
4. Table support pole comes 42" in length. This allows for a maximum seat height of 36" from the bottom floor of a pool or spa. (6" of the pole sits in the bronze anchor socket)
5. If a shorter seat height is desired, determine height required and add 6" for the bronze anchor socket. Cut pole with a hacksaw. (Example: A 24" seat height would require a 30" support pole.) **NOTE: Top of seat support pole has hole drilled to attach the pole receiver. If cutting is required, cut pole on end without hole.**
6. Deburr and clean the cut end of support pole (if cutting).
7. Bolt post receiver to support pole and tighten. ***See Figure 9.***
8. Lay the seat upside down on the cardboard box to prevent scratching. Use PVC glue to permanently attach the support pole receiver to the seat flange. Support pole should still be inside receiver. Use the support pole to fully seat the receiver into the flange. ***See Figure 10.***
9. When removing the seat be sure to insert the bronze anchor cover plate.

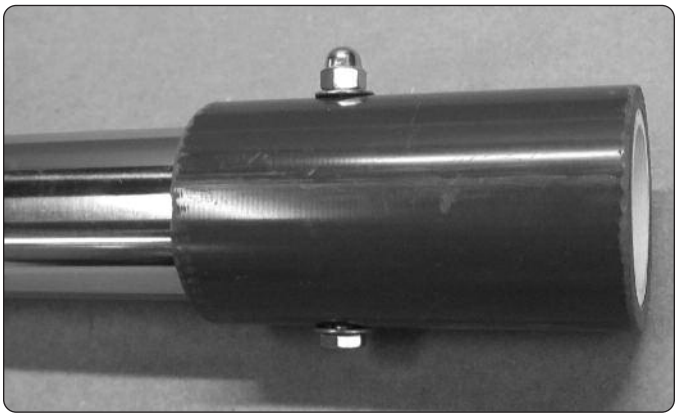

Figure 9: *Pool/Spa Seat Receiver Pole*

Figure 10: *Pool/Spa Seat Receiver Pole Seated Into Pool/Spa Seat*

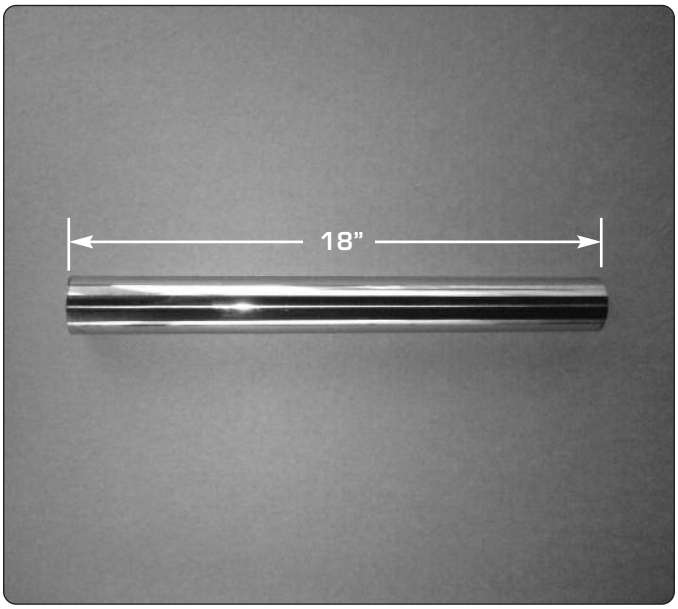

Figure 11: *18" Support Pole Image*

Figure 12: *Optional Vinyl Liner Anchor*

NOTES:

NOTES:

LIMITED WARRANTY

Inter-Fab, Inc. will repair or replace, at its option, any product manufactured by Inter-Fab, Inc. that fails during the applicable warranty period because of a manufacturing or material defect; provided that the defect is not the result of improper installation, improper use or care, negligence, alterations or modifications to the product, or natural accidents (acts of God). The applicable warranty period for products manufactured by Inter-Fab, Inc. is three (3) years from the date of retail purchase, except as specified below:

Echoes of Nature™ products are individually handcrafted and painted by skilled artisans and as a result, dimensional differences and color variations are normal and are not a basis for warranty coverage. The warranty period for pumps sold with the Echoes of Nature™ products is three (3) years from the date of retail purchase.

Water Sports™ sports equipment warranty periods are as follows: Volleyball Poles, Basketball Poles, Basketball Rim, and Basketball Backboard are one (1) year from date of retail purchase. Volleyball, Volleyball Net, Basketball, Basketball Net, and pumps are warranted for ninety (90) days from date of retail purchase.

The **Board Fall**, **Board Fall-L** (LED), and **Board Fall-F** (fiber optic) water features, used for the **Jump & Splash™**, **T7™** and ***aquaBoard™*** products, have a warranty period of one (1) year from the date of retail purchase.

Zoomerang™ slide products warranty period is one (1) year from the date of retail purchase.

Build Your Own Slide™ (BYOS™), **Build Your Own Slide 2™** (BYOS 2™), **Garden Ride Series™**, **Pool/Spa Table™**, **Pool/Spa Seat™**, and **Pool Lifestyle™** products warranty periods are one (1) year from the date of retail purchase.

City 2™ Slide and **City Base™** products warranty period are one (1) year from the date of retail purchase.

i-Lift™ products warranty period are two (2) years from the date of original shipment. The **battery**, **charger**, **receiver** (control box on i-Lift), **transmitter** (remote), and **actuator** have a warranty period of one (1) year from the date of original shipment.

Unless expressly stated otherwise all products manufactured by Inter-Fab are for **residential installation (single family residence)** inground pool use only. Inter-Fab, Inc. expressly disclaims any and all warranties and liability arising from the installation or use of its residential products for any non-residential use such as semi-public, public, or commercial applications. Products expressly manufactured for commercial installation and use will be subject to this limited warranty.

This limited warranty is in lieu of all other warranties, whether express or implied. Inter-Fab, Inc. disclaims any warranty of merchantability or fitness for a particular use, and noninfringement in relation to any of its products and Inter-Fab, Inc. is not liable for consequential, incidental or specific damages. This warranty is limited to the repair or replacement of the manufacturing or material defect, or refund of the original purchase price, whichever is less, at the sole option of Inter-Fab, Inc., and expressly does not cover any labor or reinstallation expenses related to the replacement of any and all Inter-Fab products. This limited warranty shall be the sole and exclusive remedy of irrespective of whether the claims are made in contract, tort, warranty, law, equity or by statue.

This warranty is to the original purchaser of the product only. Inter-Fab's limited warranty is neither transferable nor portable from consumer to consumer. The effective coverage date begins at the date of retail purchase. Product owner or representative must notify Inter-Fab, Inc. (or its wholesale agent) in writing, giving a full description of the nature of the product defect or failure along with proof of purchase, serial number(s) of the product and photos within thirty (30) days of the expiration of the applicable warranty period. Inter-Fab, Inc. reserves the right to physically inspect damaged or defective products or components to determine the cause of the damage or defect, prior to authorizing repair or replacement of its products.

3050 S. Alvernon Way • Tucson, AZ 85713

520.790.7040 • 800.737.5386 • Fax 520.790.7127 • inter-fab.com